Concrete Vibrator

Motor	Model	KNC80	
	Rated Input Power	800W	
	Rated Voltage	110V	
	Rated Frequency	60HZ	
	No-load Speed	5500RPM	
	G.W.	3.5KGS	
Vibration stick		KNC25	KNC35
	Diameter	25MM	35MM
	Vibrating Frequency	50/60HZ	50/60HZ
	Vibrating Amplitude	0.8MM	0.8MM
	Length	400MM	400MM

Operation and maintenance

1.Make sure milled nut 3 which is used to connect motor and tap hose, is fixed before start the machine. Milled nut can be fixed by turning it to left.

2.Do not switch off or cut off the electricity supply when tap hose is taping concrete, or tap hose would become involved in concrete and difficult to be got out due to cease of vibration.

3.Pay attention to the fraying condition of carbon brush, please renew it when it is frayed to 6mm, or motor will be injured.

4.Check seal condition of all the joint between tube and tap hose during using it(please turn to left to fix connector),do not let water and concrete get into vibrator and damage the bearing and oil tight in it and result it in the cease of machine finally. Prevent motor from water and concrete can prolong the useful time of it.

5.Stop using of machine as soon as the appearance of abnormal voice, over great spark from brush, over high temperature and peculiar smell, and go on to use it after researched the reason and repaired.

6.Each time after 100 hours use of machine, please take apart spare parts as tube, rotating shaft and hose to clean and replace lubricant grease, examine whether rubber oil tight and O type seal ring still well, replace them with new one if they are damaged. Please be informed that there should be no water and oil in the lower lumen of oil tight, otherwise vibrator will vibrate in weak power. In order to prevent vibrator from water, please use 0.2mm polytetrafluoroethylene belt to pack threading when you seal threading joint in assembling the machine.

7.Please clean the outside of machine, pony roll and tie up cable wire every time after you used it. Do not leave them lying about.

KNC80 VIBRATOR MOTOR DIAGRAM & PART LIST

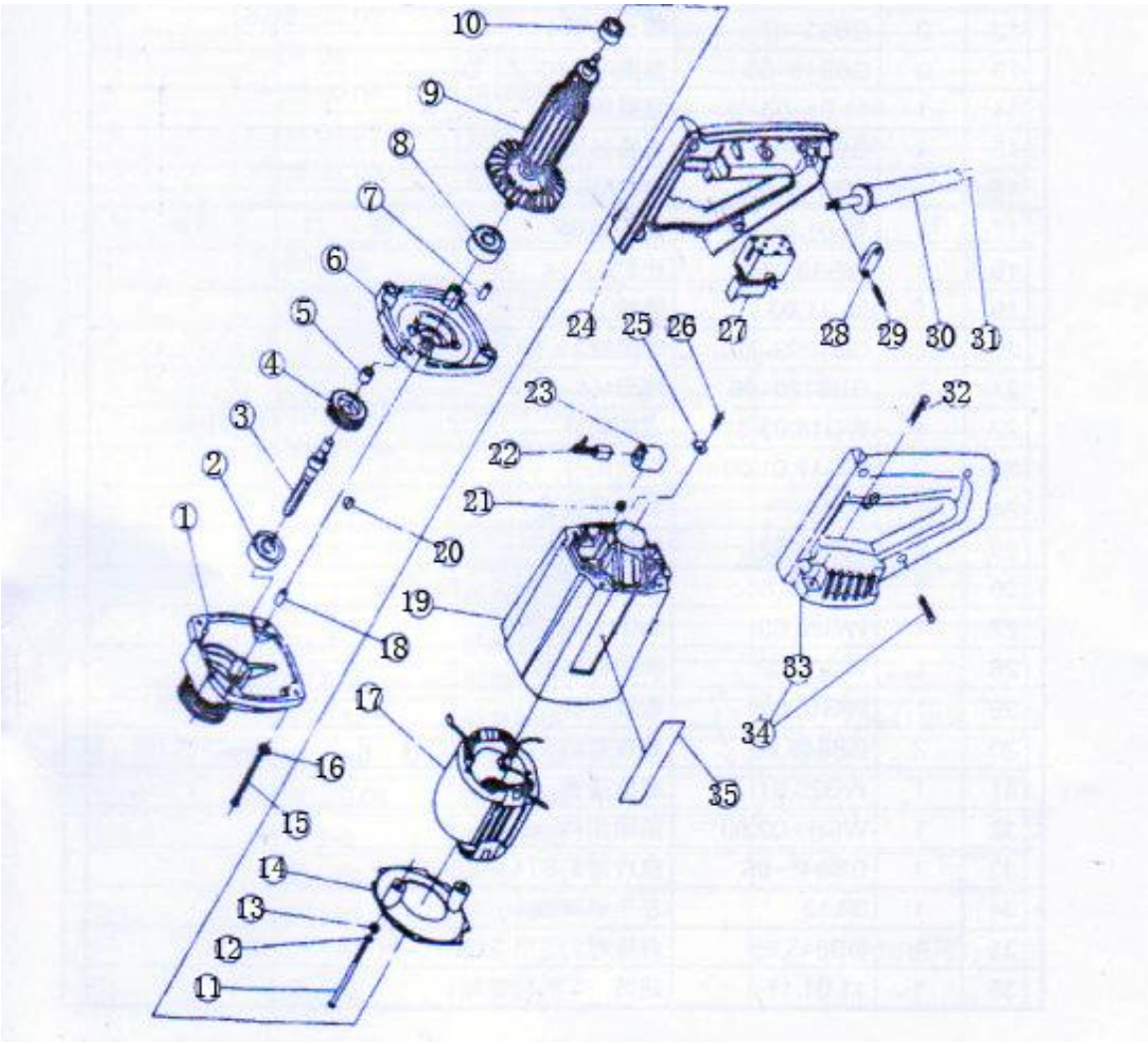

KNC80 VIBRATOR MOTOR PARTS LIST

ITEM NO	PART NO	DESCRIPTION	QUANTITY
1	600001	Gear box	1
2	600002	Bearing 60200	1
3	600003	Major axis	1
4	600004	Gear wheel	1
5	600005	Oil bearing 8E8x12x8	1
6	600006	Middle cover	1
7	600007	Shim 6x10	1
8	600008	Bearing 60200	1
9	600009	Rotator	1
10	600010	Bearing 60027	1
11	600011	Stator screw M4x70	2
12	600012	Spring pad	2
13	600013	Washer 4-140-Zn-D	2
14	600014	Air seal plate	1
15	600015	Screw	4
16	600016	Spring pad 5	4
17	600017	Stator M5x32	1
18	600018	Shim 6x14	1
19	600019	Cabinet	1
20	600020	Half-round key 3x10	1
21	600021	Screw M4-ZnD	2
22	600022	Carbon brush	4
23	600023	Carbon brush holder	2
24	600024	Right handle	1
25	600025	Support plate	2
26	600026	Screw	2
27	600027	Switch DKP1-5G	1
28	600028	Wire clamp	1
29	600029	Wire clamp screw	2
30	600030	Cable jacket	1
31	600031	Cable	1
32	600032	Screw	2
33	600033	Self-drilling Screw ST 4.8x25-C-H	4
34	600034	Left Handle	1
35	600035	Name plate	1

KNC80 VIBRATOR HOSE DIAGRAM & PART LIST

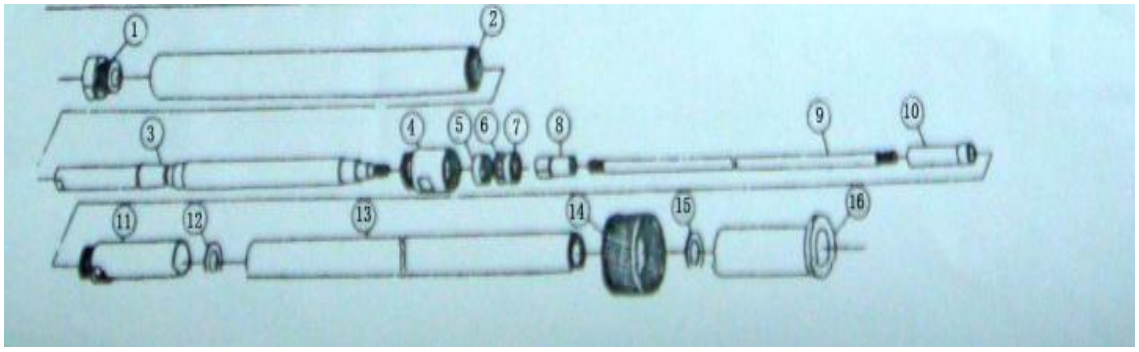

KNC80 VIBRATOR HOSE PARTS LIST

ITEM NO	PART NO	DESCRIPTION	QUANTITY
1	350001	VIBRATOR HEAD	1
2	350002	COVER TUBE	1
3	350003	STICK	1
4	350004	BEARING SEAT	1
5	350005	OIL SEAL	2
6	350006	WASHER	1
7	350007	BEARING SEAT	1
8	350008	SHAFT CONNECTOR Ⅱ	1
9	350009	FLEXIBLE SHAFT	1
10	350010	SHAFT CONNECTOR Ⅰ	1
11	350011	FLEXIBLE HOSE CONNECTOR Ⅰ	1
12	350012	WASHER	1
13	350013	FLEXIBLE HOSE	1
14	350014	CONNECTING NUT	1
15	350015	WASHER	1
16	350016	FLEXIBLE HOSE CONNECTOR Ⅱ	1